ACCESSORY



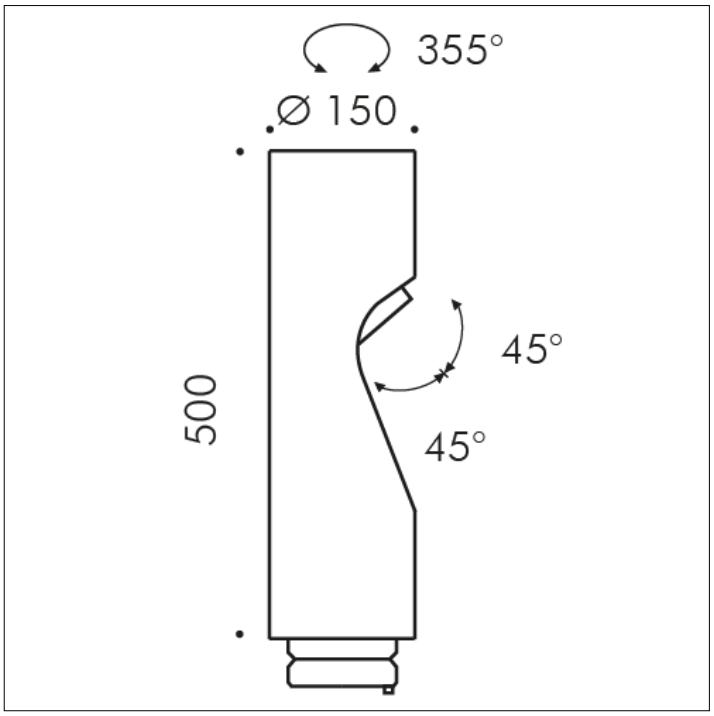

S.1492W
SHIFT PRO ADDITIONAL HEAD WITH ELLIPTIC OPTIC

LED MODULE 3000K CRI90 Rated module luminous flux: 4240lm Rated luminaire luminous flux: 2666lm Rated module power: 27W Rated luminaire power: 31W 220V-240Vac 50/60Hz Dimmable DALI 2 / PUSH IK10
Possibility to add to SHIFT PRO POLE up to four additional heads, obtaining a configuration of two or maximum five heads.
Accessory available in the following colors: Black (cod.09), Anthracite grey (cod.24)

SIMES S.p.A. - Via G.Pastore 2/4 - 25040 - Corte Franca (BRESCIA) ITALY - www.simes.it - e-mail: simes@simes.it
Export Sales: Tel. +39 0309860440 / Technical Dep.: Tel. +39 0309860450 / Lighting Design Dep.: Tel. +39 0309860425

The present technical data sheet and all the information contained is property of SIMES S.p.A. All rights reserved.
We reserve the right to change specifications without prior written notice.