ACCESSORY



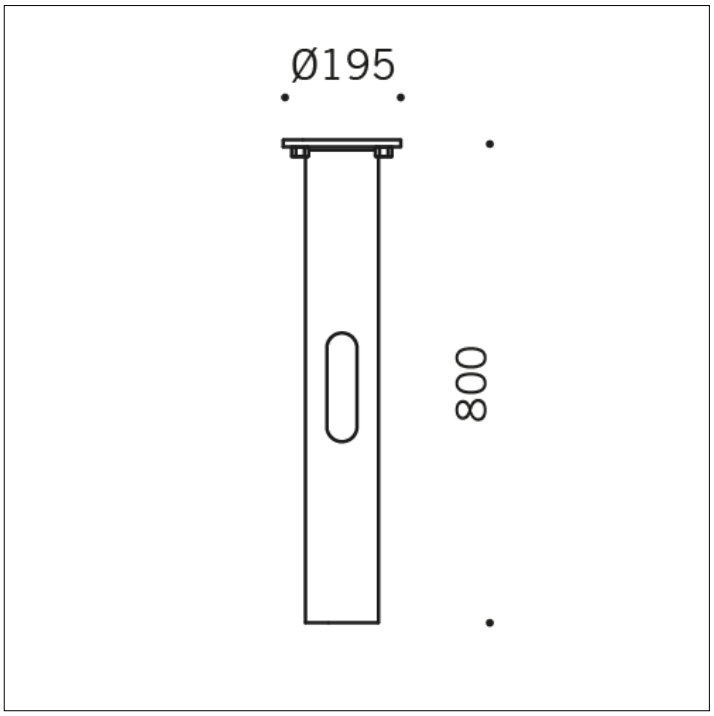

S.4129
FLANGE

Ø 195 mm h 800mm flange to be fixed in concrete with steel screws treated with an advanced anticorrosive coating for fixing in the ground.

Exclusive distributor for USA
Sistemalux Inc. - 9320 Saint Laurent, Montréal (Qc) - Canada QC H2N 1N7 - Tel.: +1 (514) 523-1339

The present technical data sheet and all the information contained is property of SIMES S.p.A. All rights reserved.
We reserve the right to change specifications without prior written notice.