ACCESSORY



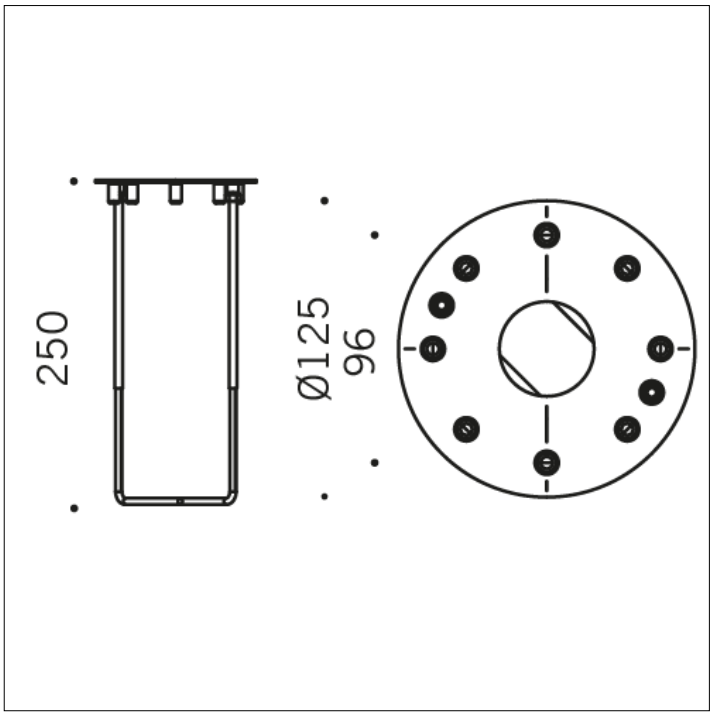

S.5680
ANCHOR FLANGE TO BE CEMENTED TO THE GROUND

For applications in driveways areas, the luminaires must be installed with its proper anchor flange. The flange is provided with the necessary fixing steel screws treated with an advanced anticorrosive coating.

SIMES S.p.A. - Via G.Pastore 2/4 - 25040 - Corte Franca (BRESCIA) ITALY - www.simes.it - e-mail: simes@simes.it
Export Sales: Tel. +39 0309860440 / Technical Dep.: Tel. +39 0309860450 / Lighting Design Dep.: Tel. +39 0309860425

The present technical data sheet and all the information contained is property of SIMES S.p.A. All rights reserved.
We reserve the right to change specifications without prior written notice.