ACCESSORY

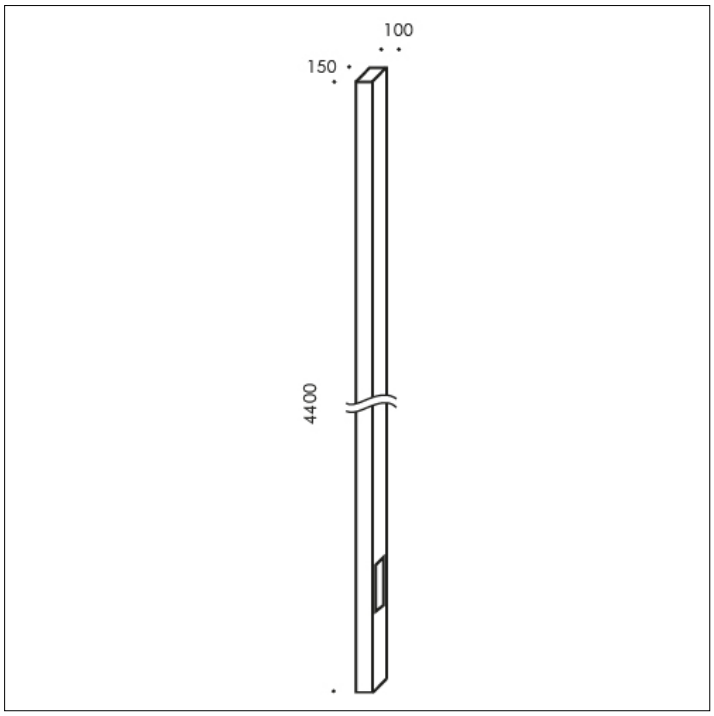

S.7119
RECTANGULAR ALUMINUM POLE (MANDATORY FOR PARK RECTANGULAR POLE TOP)

Rectangular base pole H 4,4m above ground with inspection door and fixing counterflange.
suggest S.7109 Fixing base to be buried fot rectangular pole Or S.7108 Fixing base for park rectangular pole
Accessory available in the following colors: Aluminium grey (cod.14), Anthracite grey (cod.24)

SIMES S.p.A. - Via G.Pastore 2/4 - 25040 - Corte Franca (BRESCIA) ITALY - www.simes.it - e-mail: simes@simes.it
Export Sales: Tel. +39 0309860440 / Technical Dep.: Tel. +39 0309860450 / Lighting Design Dep.: Tel. +39 0309860425

The present technical data sheet and all the information contained is property of SIMES S.p.A. All rights reserved.
We reserve the right to change specifications without prior written notice.